DEFNE KONSOL

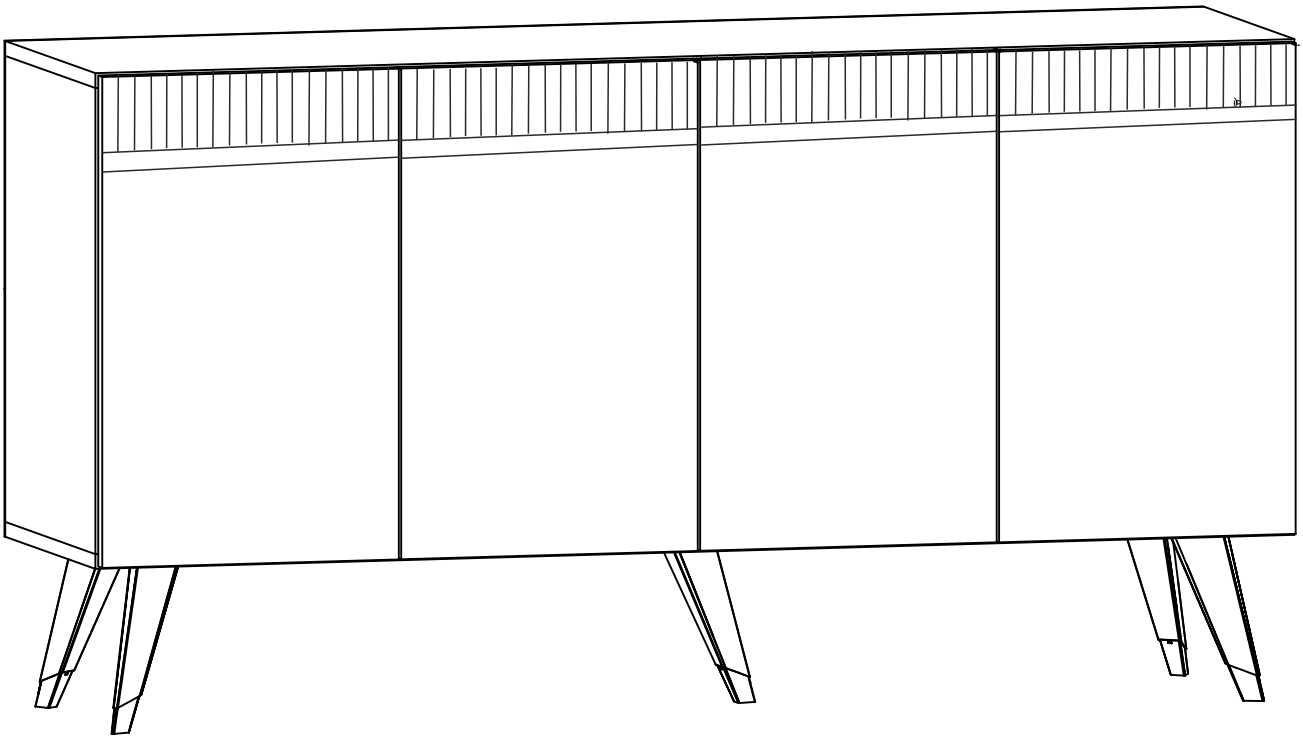

Dear Customer,

We design and produce our products for people to love and have fun with them as we do.
The product you bought was subjected to all sorts of tests and control before sending out to you.

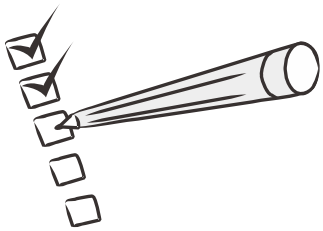

Before start assembling, please check the whole components and accessories according to the lists. If you bought more than one product, to prevent confusion be sure that you completed the first product. Then start the other product's assembling.

Before start assembling, please clean all the components with a damp cloth.
Also for usual cleaning, this will be enough.

Although all the products are produced and packed carefully,sometimes happen that some component is damaged during the transportation. In such a case please check the missing or damaged part and do not hesitate to contact us. You can send e-mail to info@xxxxxxxxxxxxxx.com or reach us at xx xxx xxx xx xx

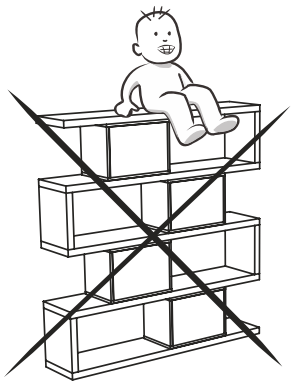

Do not use your furniture for out of purposes.
If you would like to use it, please contact us for further questions.

Do not directly contact your furniture with excessive heat, cold and humidity because the product can be affected..

ATTENTION !!

Minifix is the main connection material used in products. Before starting assembly, please check the drawings below.

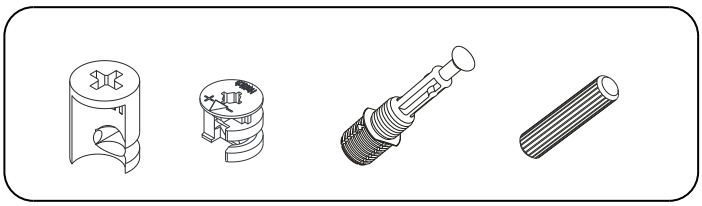

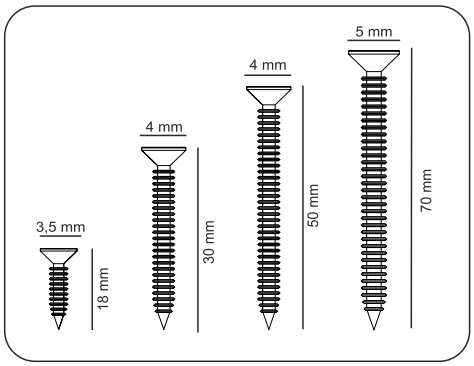

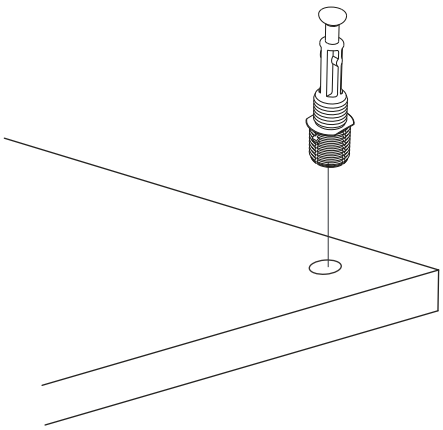

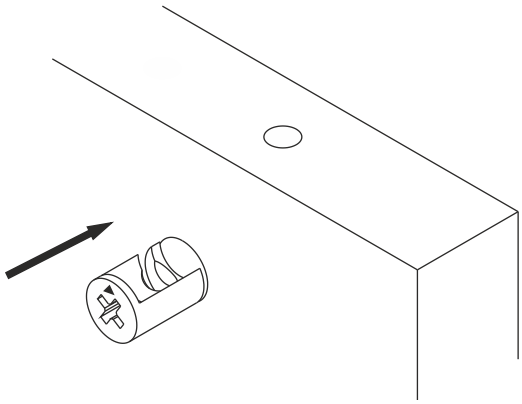

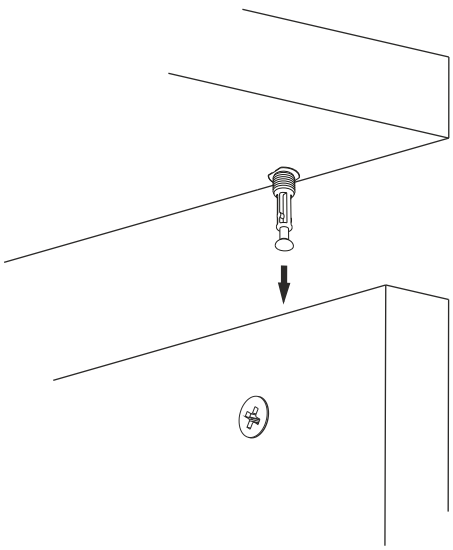

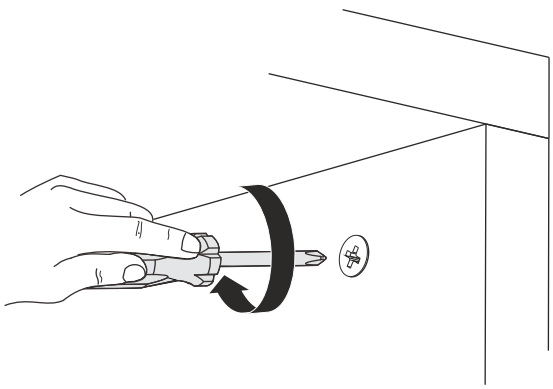

ACCESSORY LIST

A06 Minifix M8 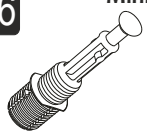 12x	A01 Minifix G18 12x	A23 RP 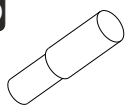 8x	A13 MA 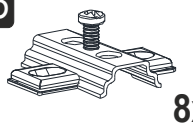 8x	A12 DM 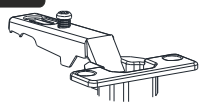 4x
A41 YRMDV 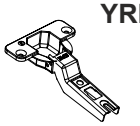 4x		A10 3,5x18 56x	V23 AYAK 5x	
A28 AC 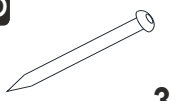 36x	A04 Minifix Tapa 12x			

GENERAL VIEW

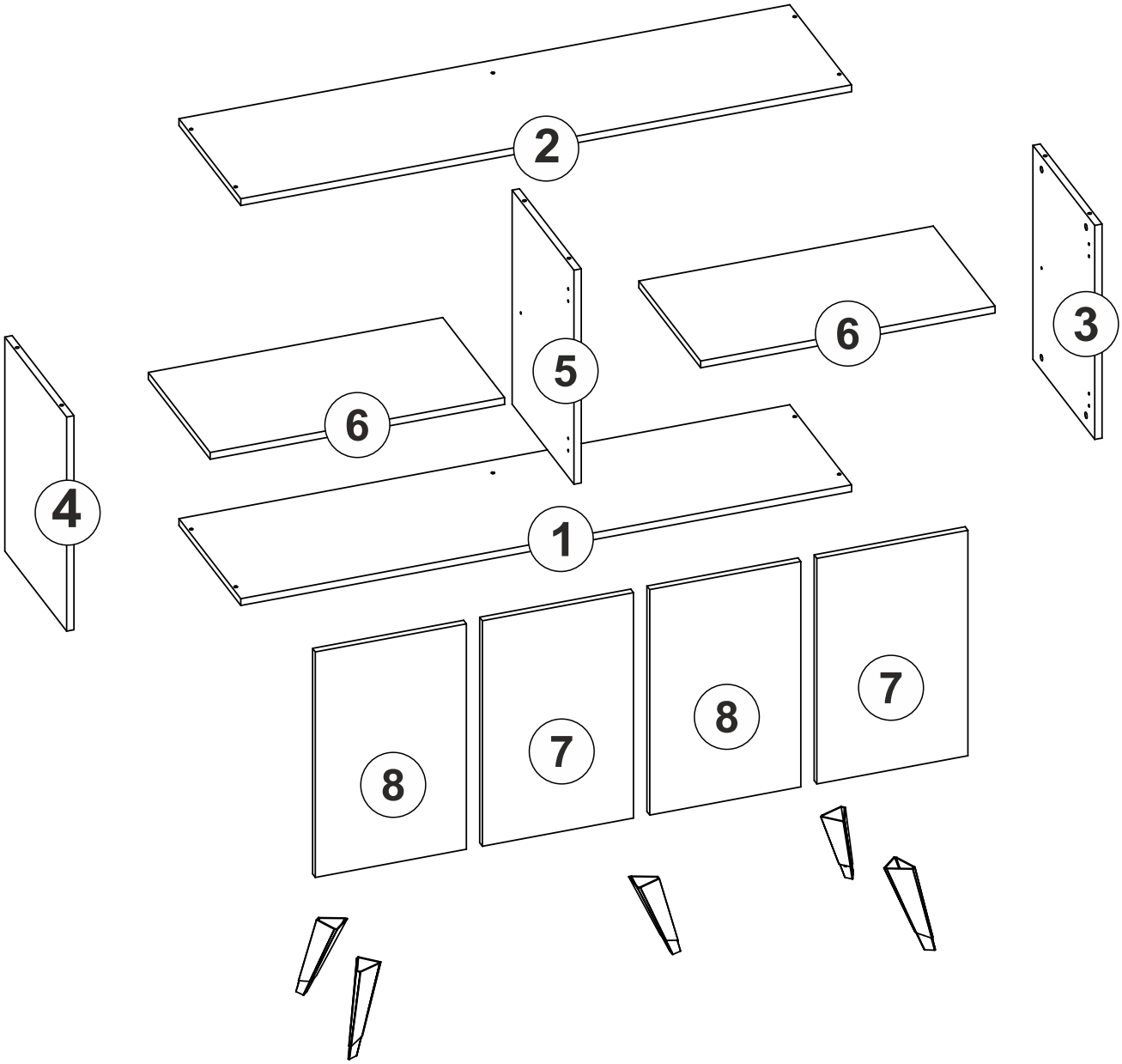

1

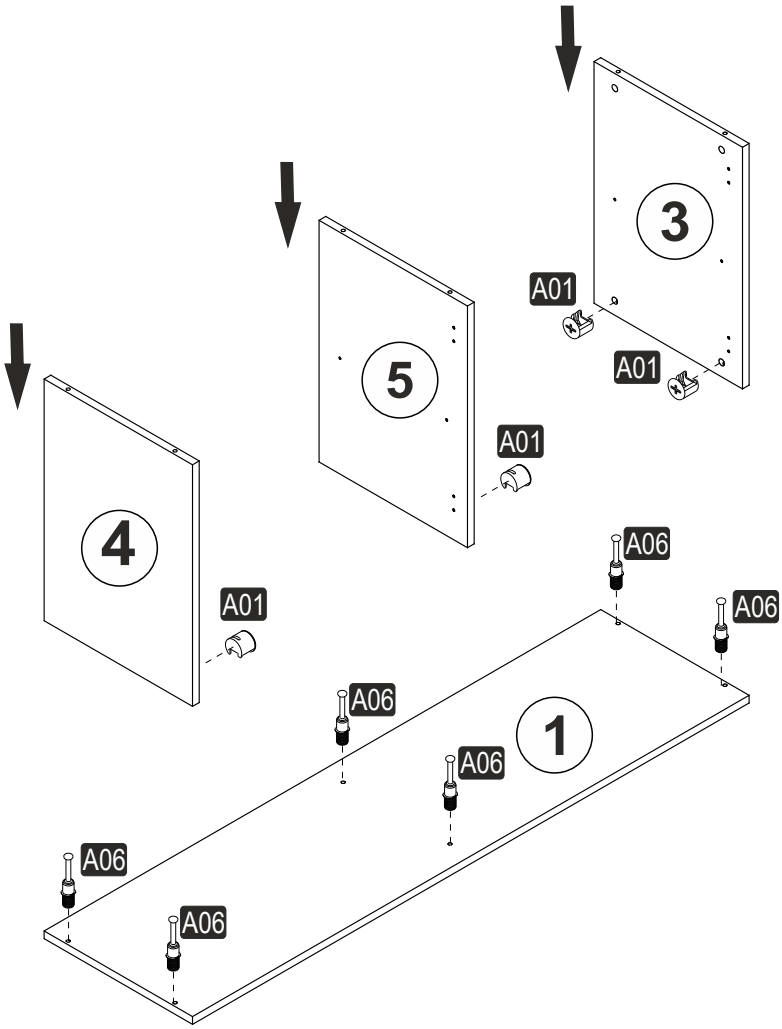
3
5
4
1
A01
A01
A01
A01
A06
A06
A06
A06
A06
A06
A06

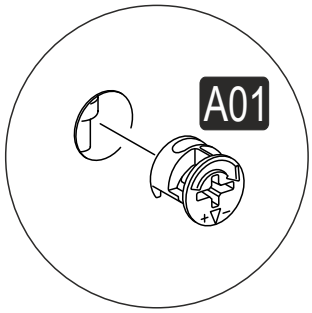
A01

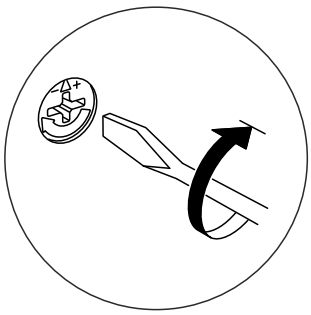

2

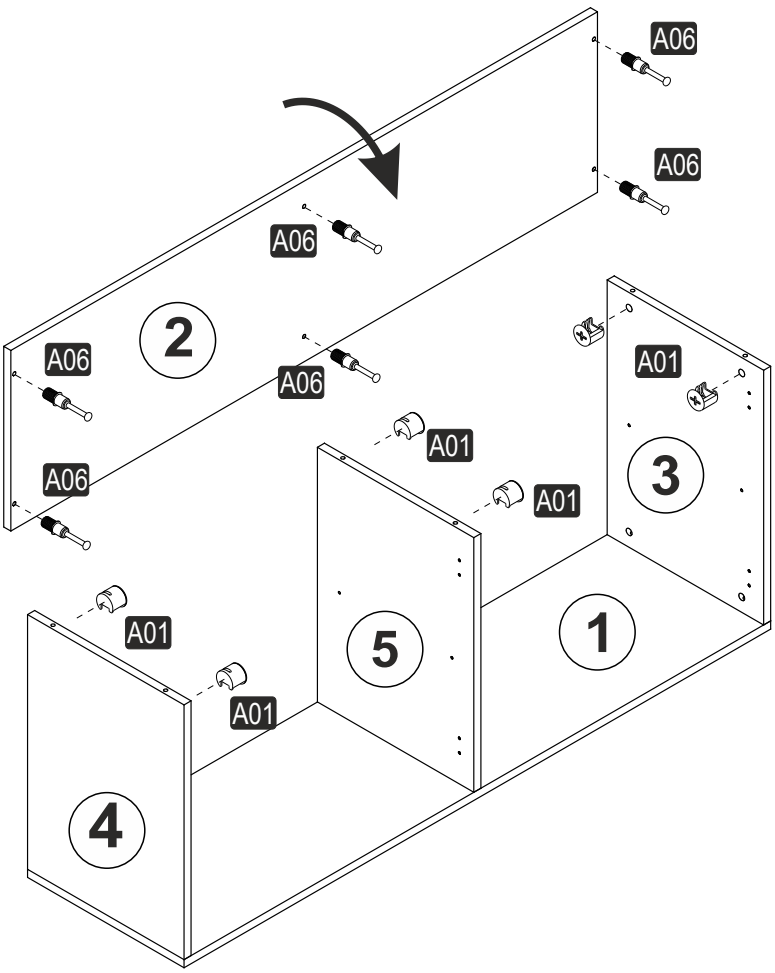
A06
A06
A06
2
A06
A06
A06
A06
A01
A01
A01
3
A01
A01
5
1
4

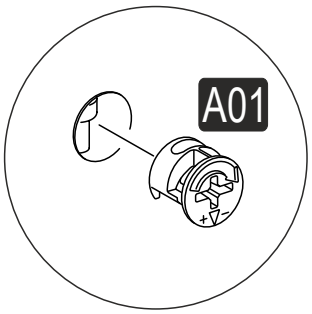
A01

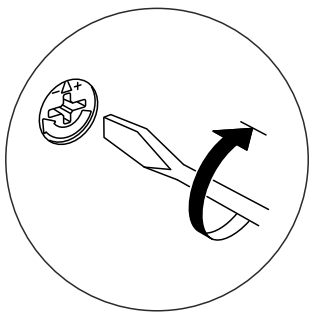

3

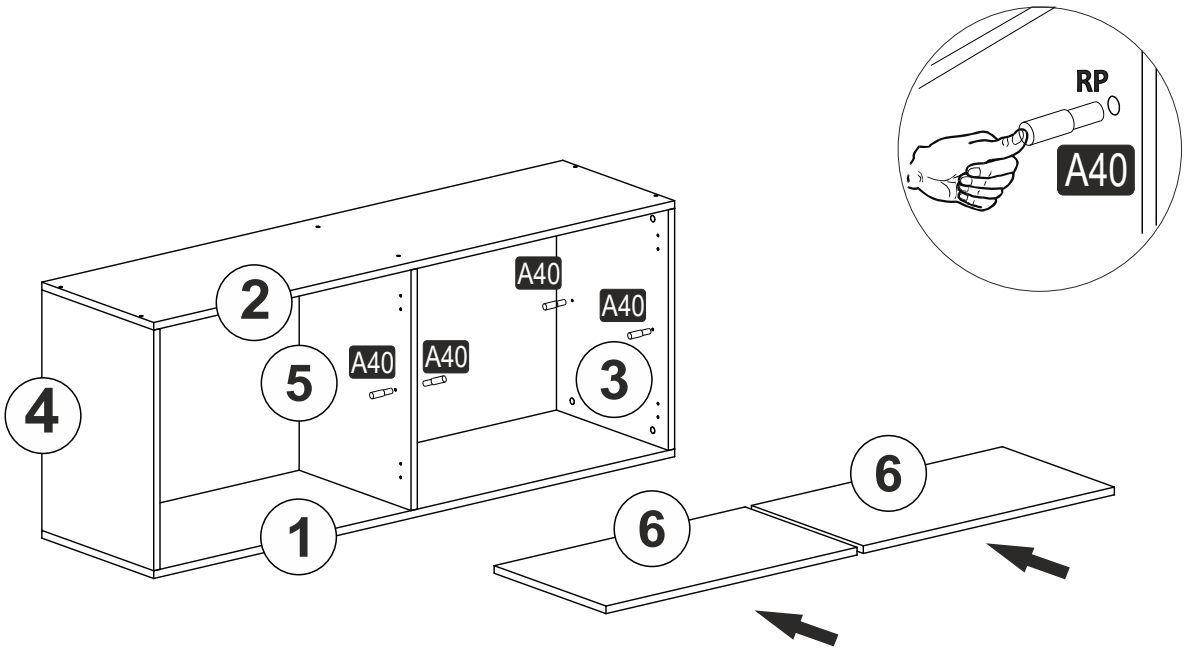

4

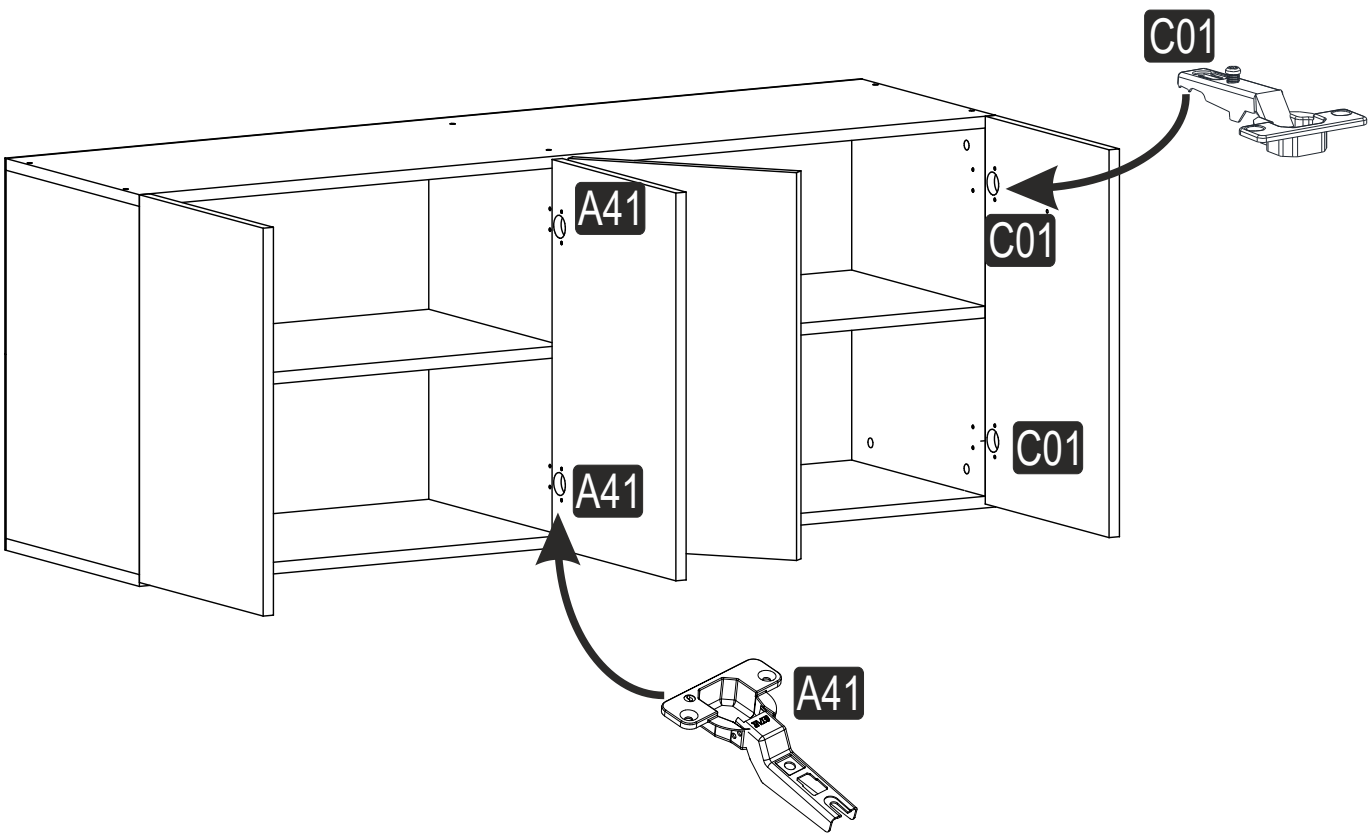

5

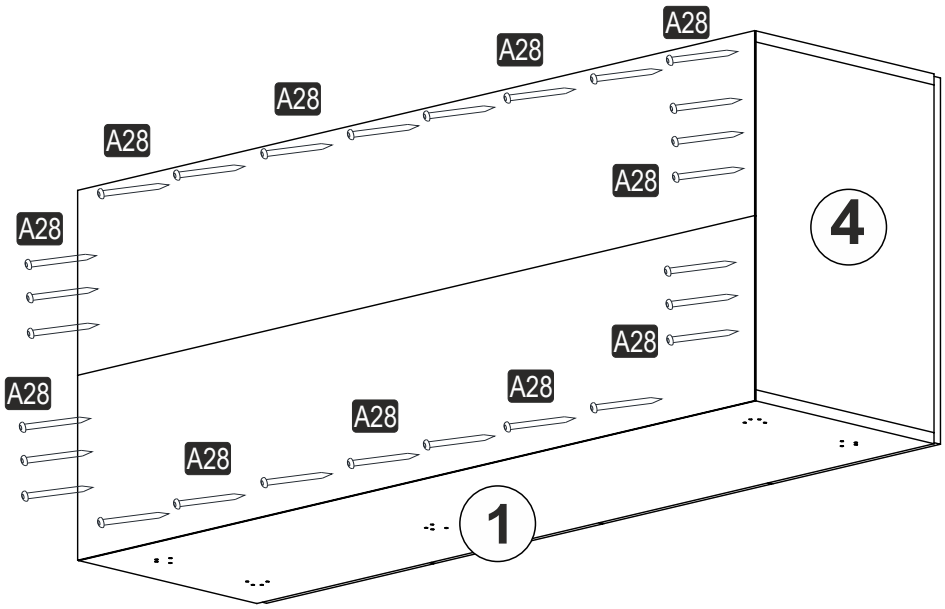
A28
A28
A28
A28
A28
A28
A28
A28
A28
A28
A28
4
1

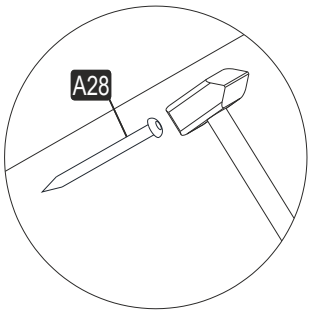
A28

6

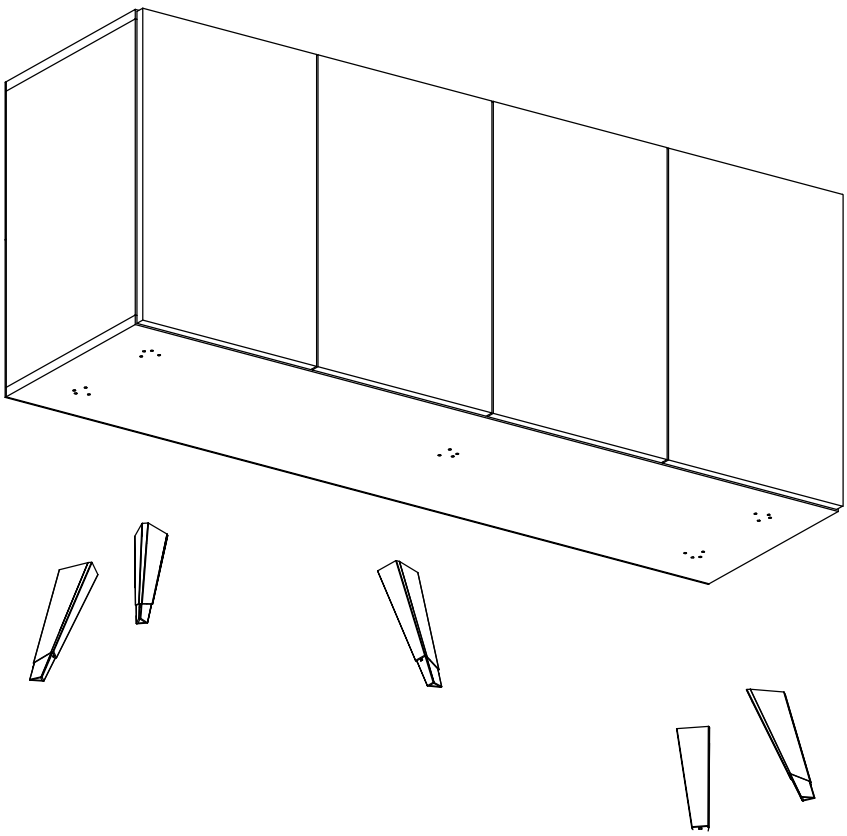

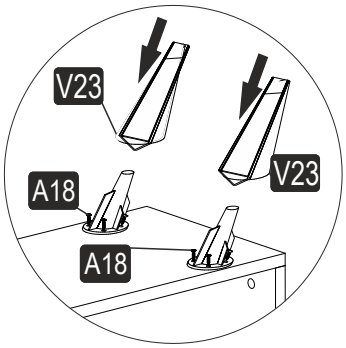
V23
V23
A18
A18

DEFNE TV ÜNİTESİ ALT MODÜL

MONTAJ VE KULLANIM KLAVUZU

ASSEMBLY MANUEL

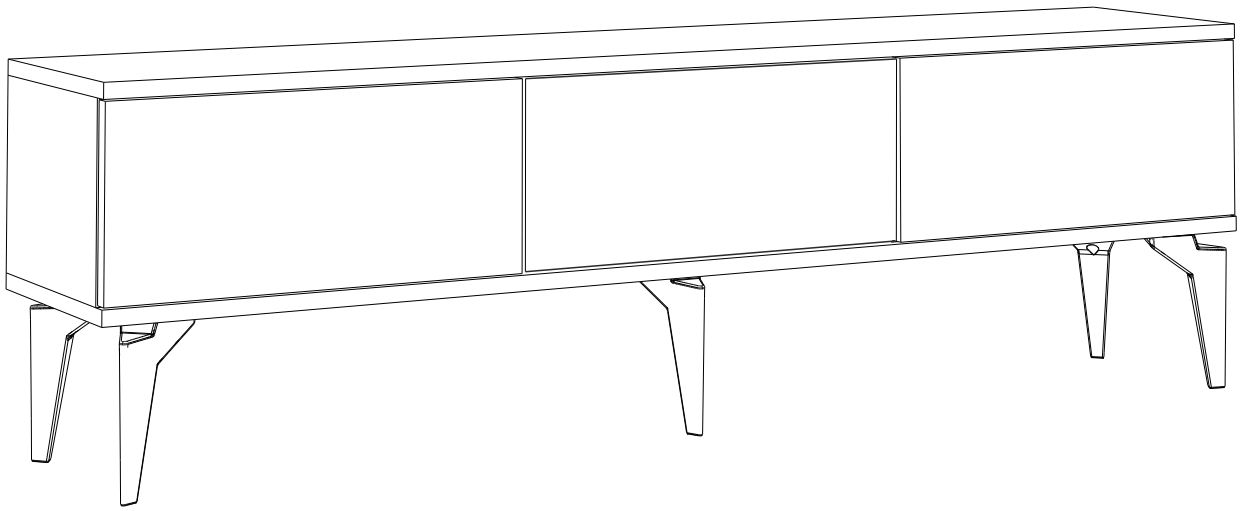

SAYFA 2

Bu modül iki kişi tarafından kurulmalıdır.
This unit should be assembled by two persons.

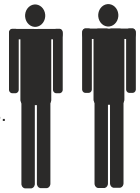

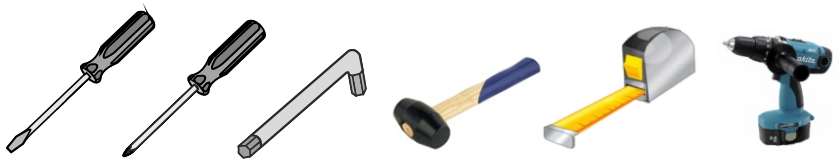

Bu modülün kurulumu için gerekli olan araçlar.
The necessary tools (not included)

AKSESUAR LİSTESİ / Accessory List

A01 Minifix Gövde 16x	A02 Minifix Mil 16x	A04 Minifix Tapa 16x	A20 3,5x30 YHB vida 15x	A28 Arkalık Çivisi 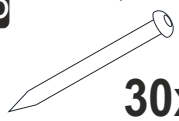 30x
A52 Elegans ayak 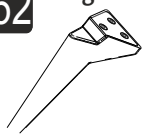 5x	A11 Tam Deve Boynu Menteşe 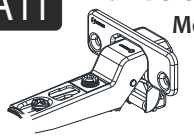 6x	A13 Menteşe Atlığı 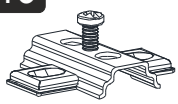 6x	A10 3,5x18 YHB Vida 24x	

PARÇA KODLAMA / GENERAL VIEW

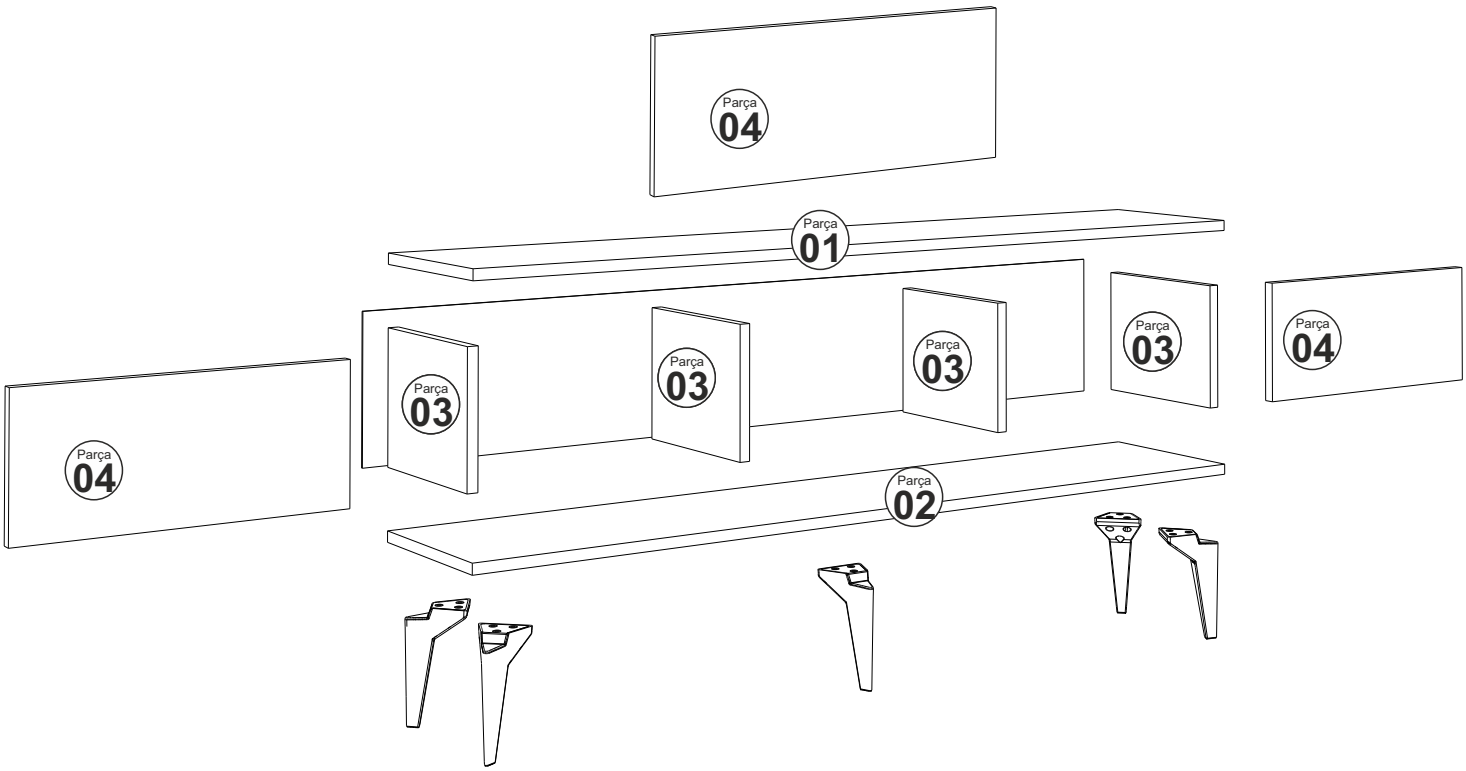

SAYFA 3

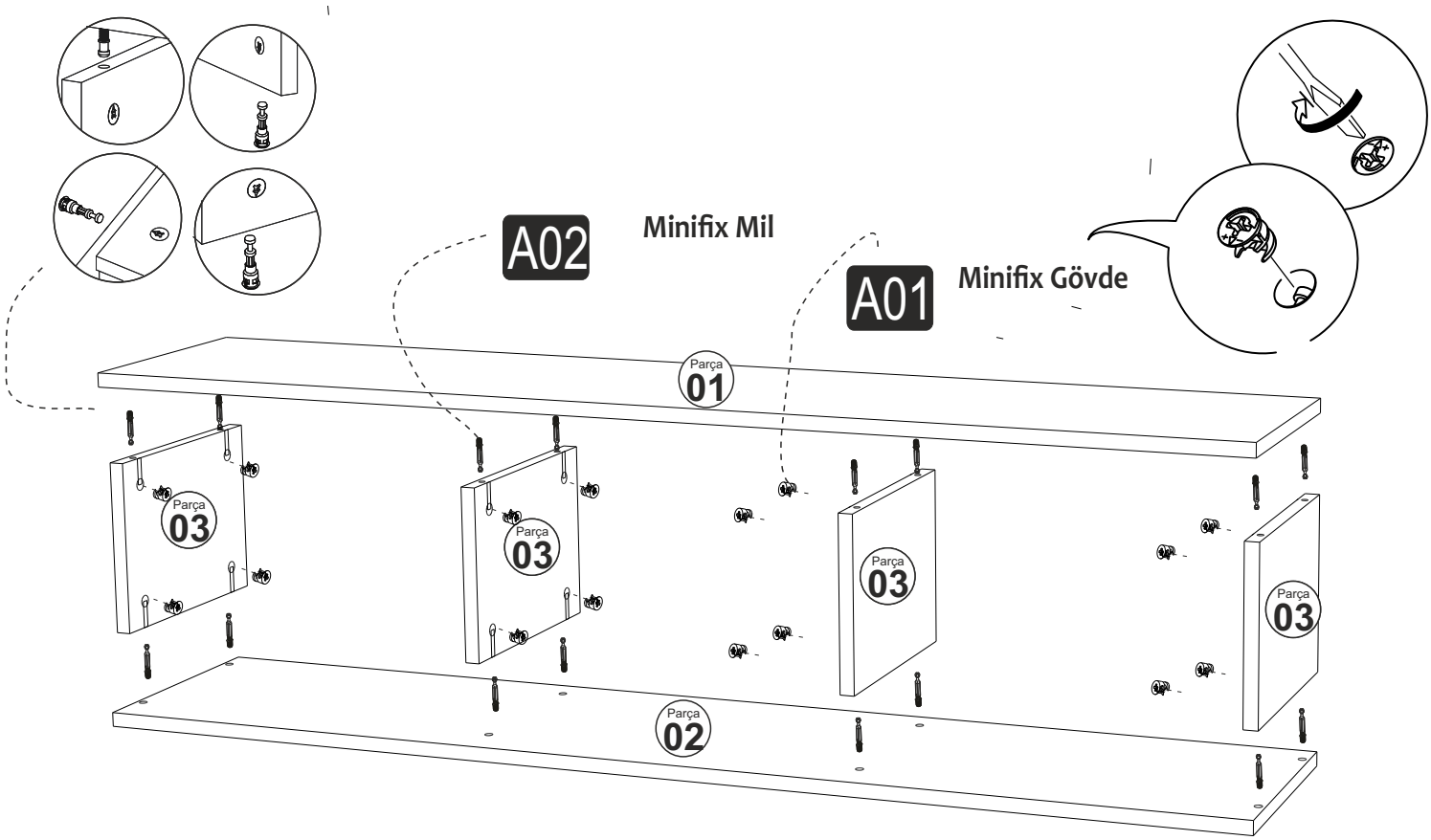
A02
Minifix Mil
A01
Minifix Gövde
Parça 01
Parça 03
Parça 03
Parça 03
Parça 03
Parça 02

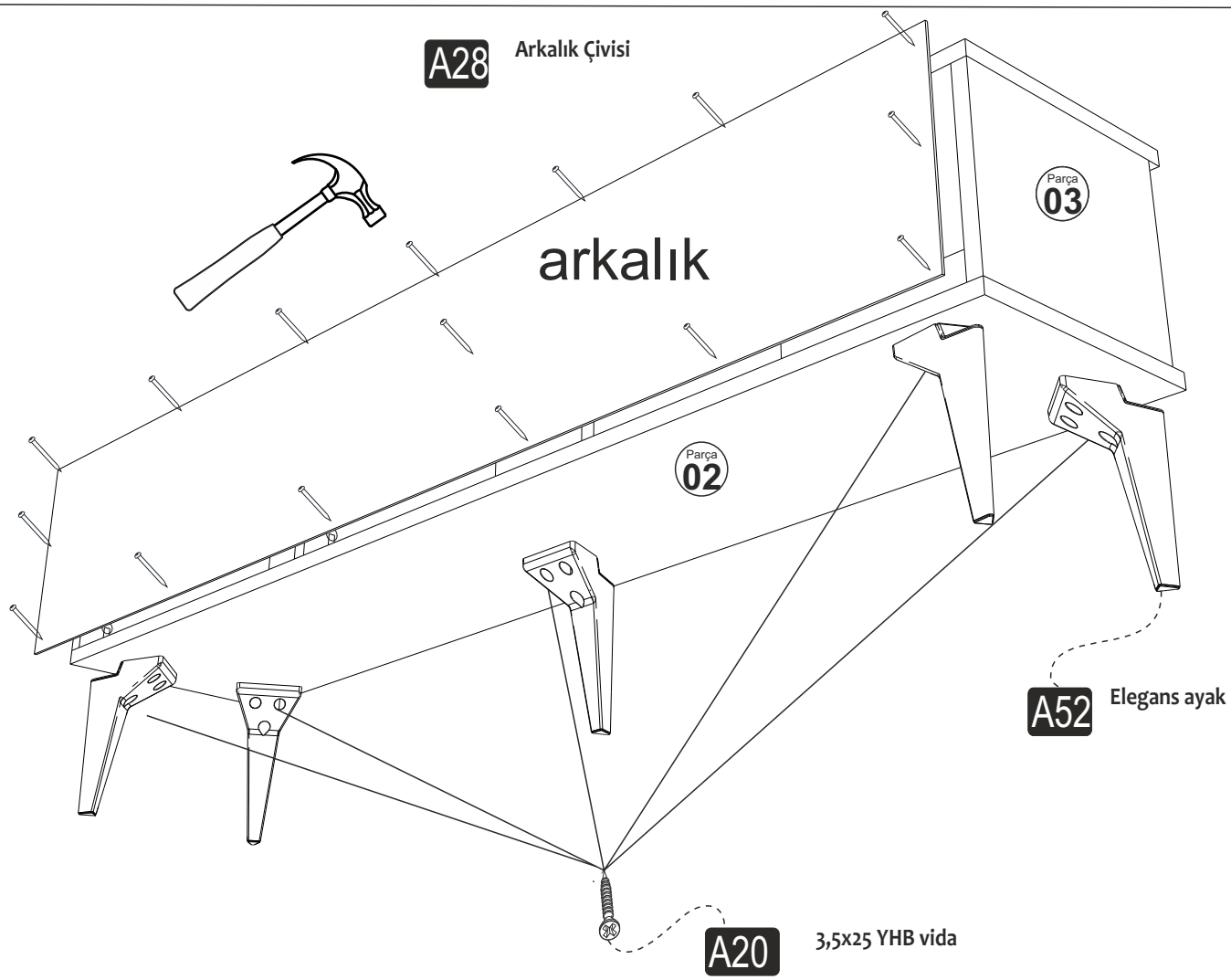
A28
Arkalık Çivisi
arkalık
Parça 03
Parça 02
A52
Elegans ayak
A20
3,5x25 YHB vida

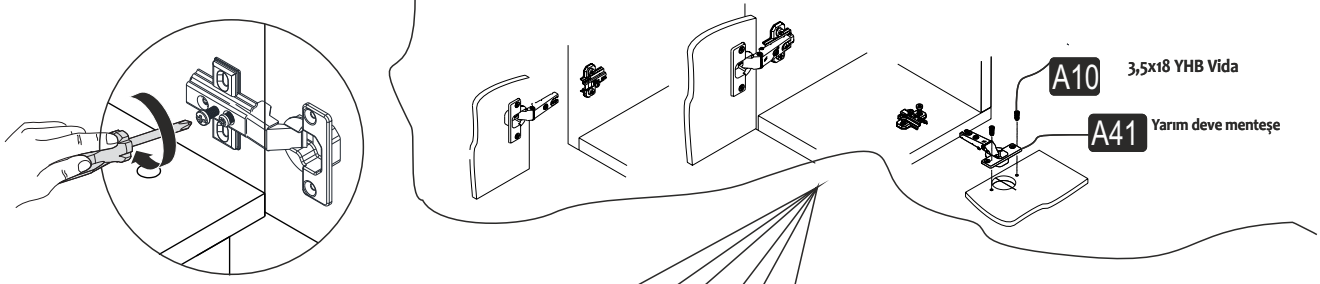
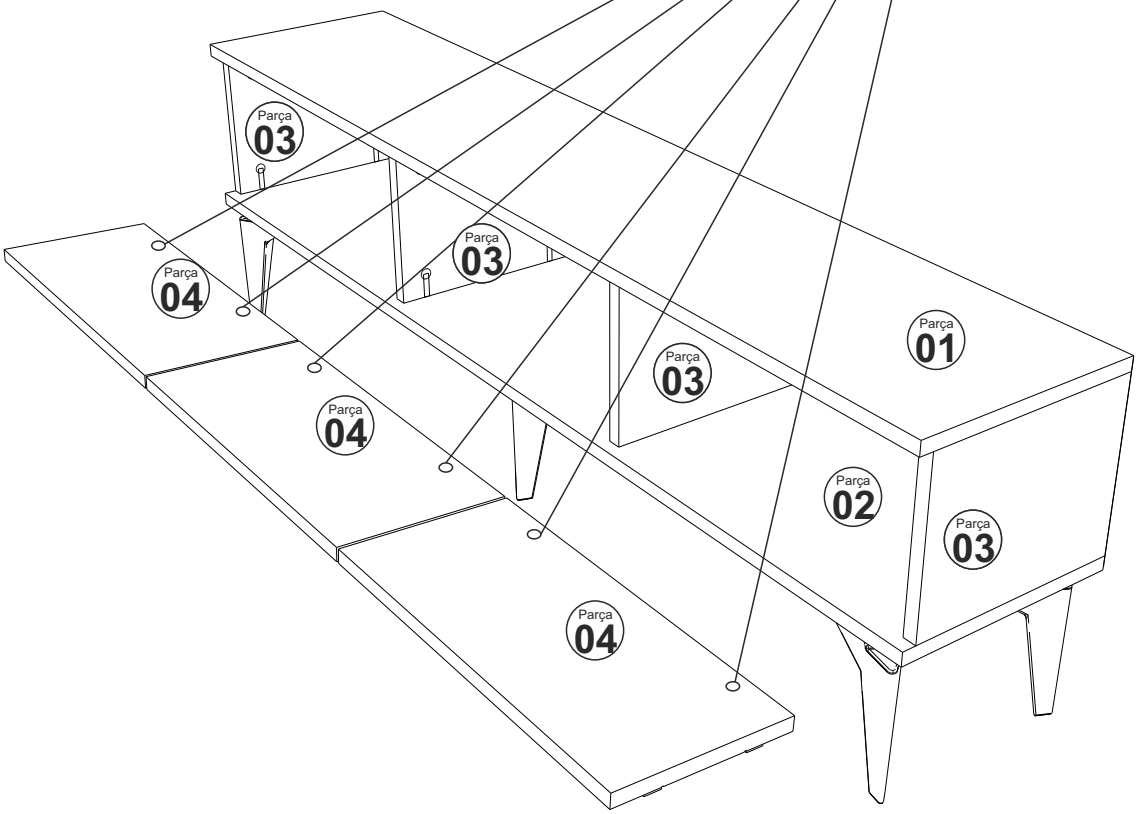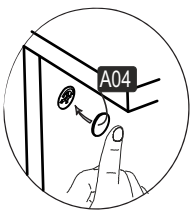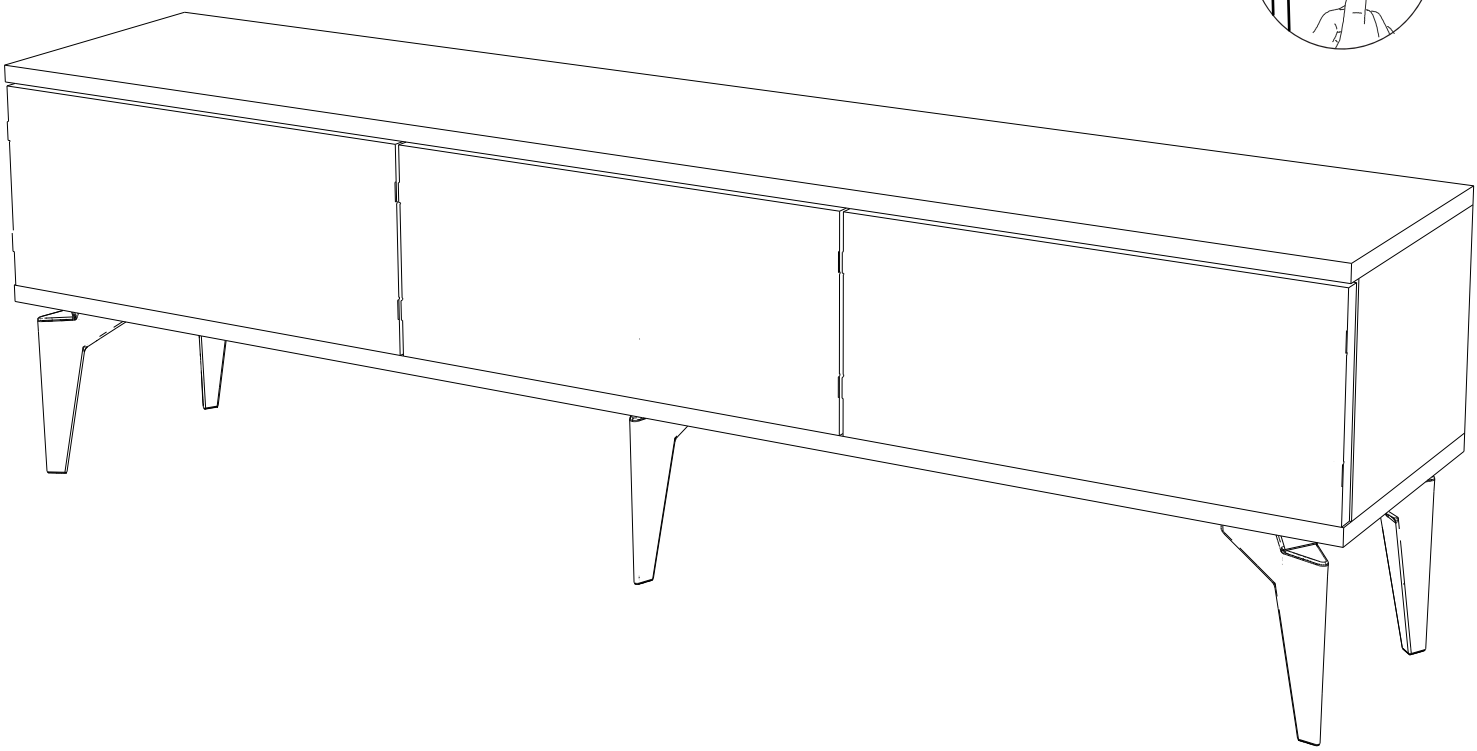
MENTEŞE AYAR VİDASI