# INSTALLATION MANUAL

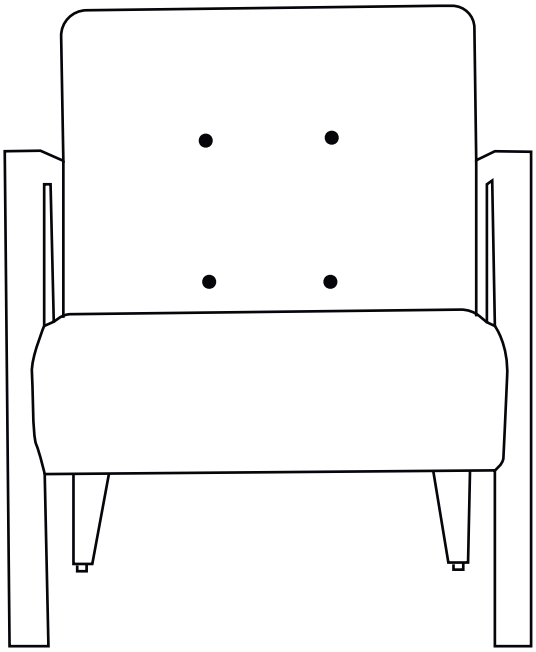

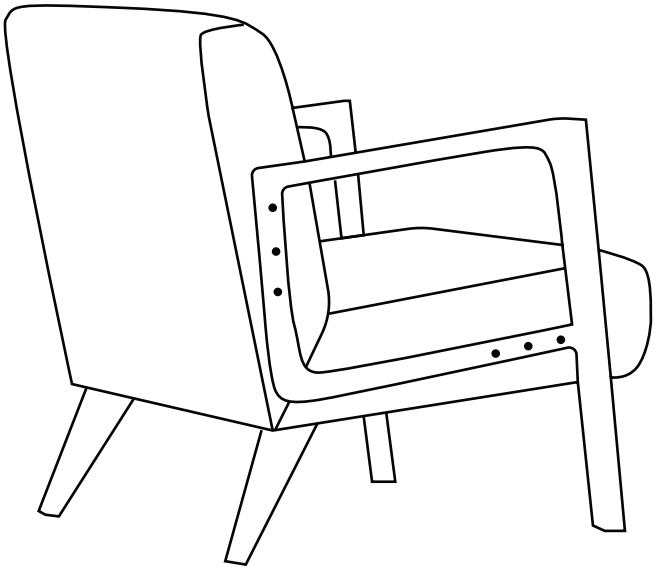

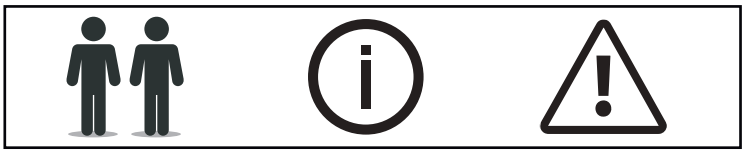

| | | |
|---|---|---|
| A 2x | B 2x | C 12x |
| D 12x | E 12x | F 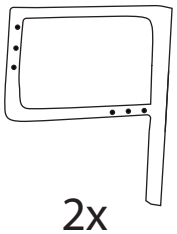 2x |

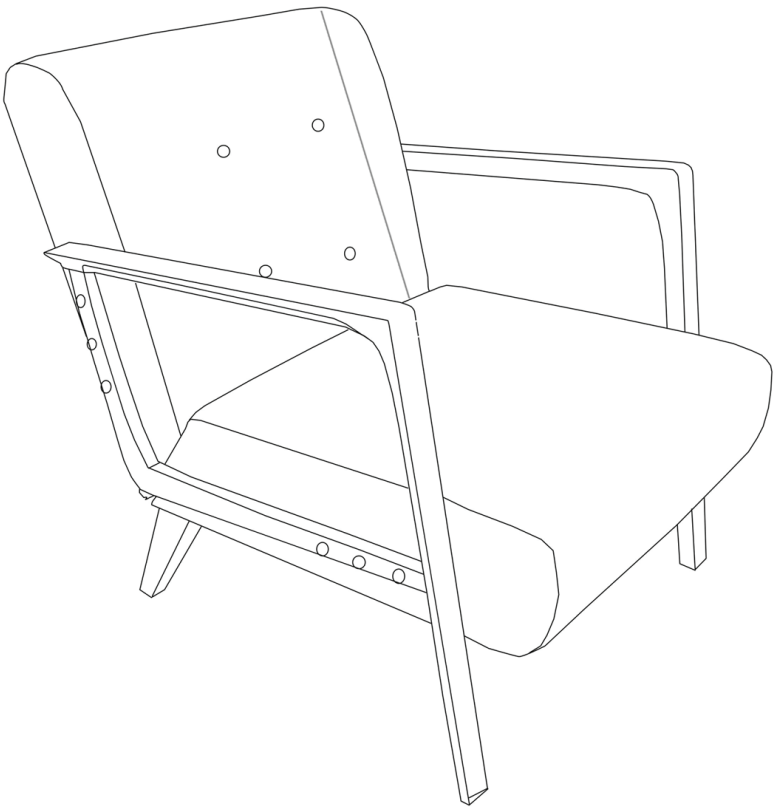

① Open the plastic bag.

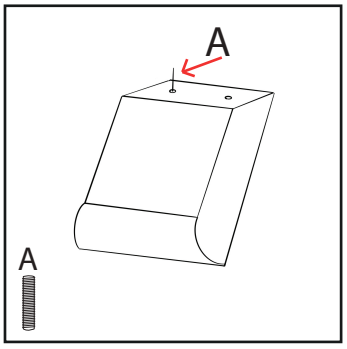


② Mount the screws on the backrest.

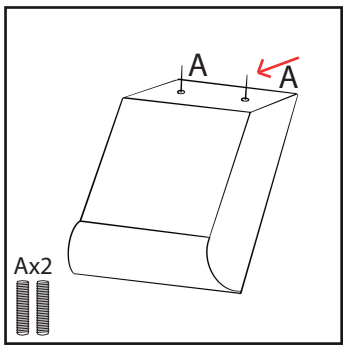


③ Mount the screws on the backrest.

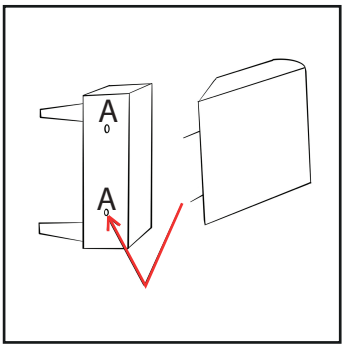


④ Assamble the bacrest and the seat.

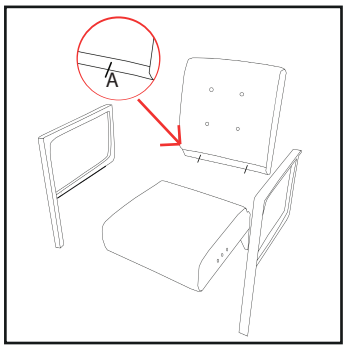


⑤ Assamble the bacrest and the seat.

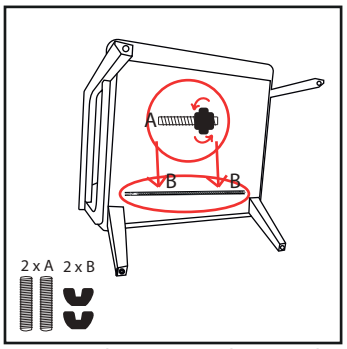


⑥ Open the zipper and mount the screw nuts.

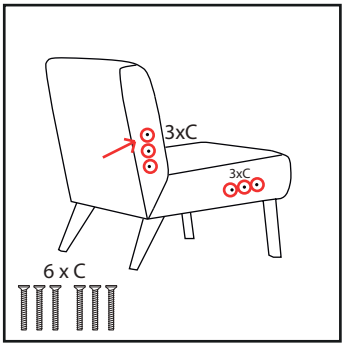


⑦ Assamble the armrests (Some force might be needed to make the holes align.).

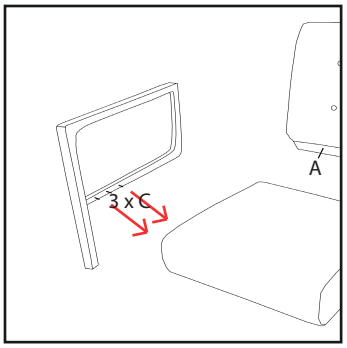


⑧ Assamble the armrests (Some force might be needed to make the holes align.).

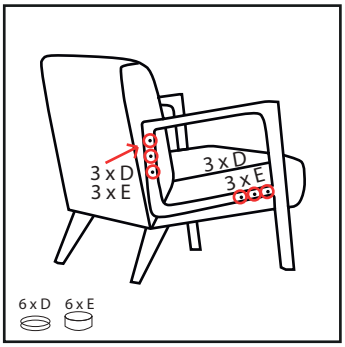


⑨ Apply the tops of the screw heads.

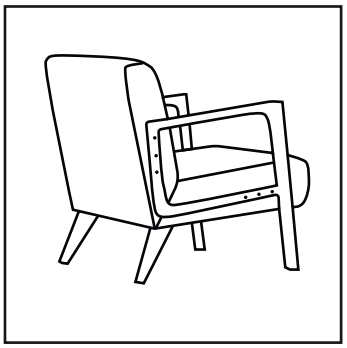
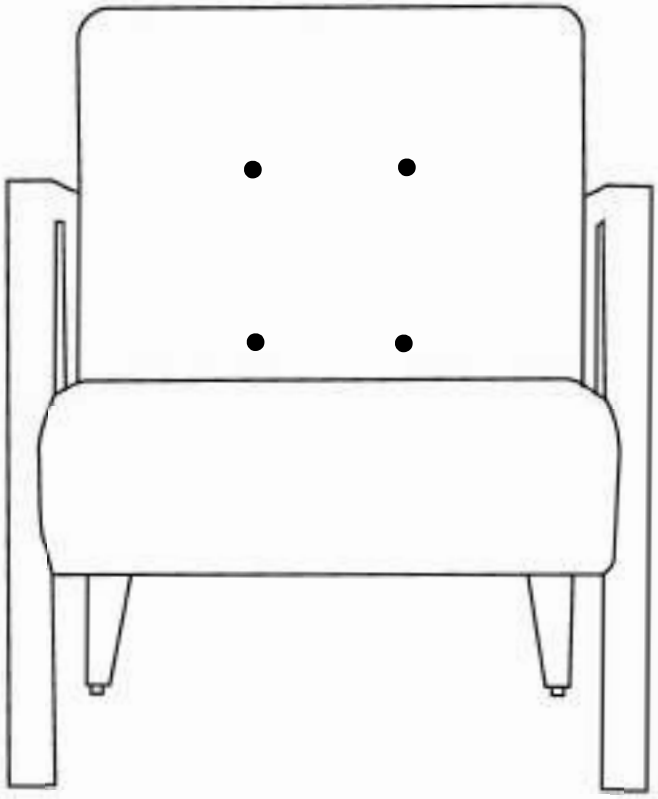
⑩